MOON ENVIRONMENT TECHNOLOGY CO.,LTD.

Add: No.1 Binglun Road,Yantai,P.R.China
Service Hotline: +86-535-6697172
Email: info@moon-tech.com
Website: www.moonoverseas.com

WhatsApp

冰轮环境
MOON-TECH

Direct-fired lithium bromide absorption water chiller（heater)

MOON ENVIRONMENT TECHNOLOGY CO.,LTD.

冰轮环境 MOON-TECH

CONTENTS

Company profile 01
Product appearance 02
Product nomenclature 03
Cooling principle 04
Heating principle 05
Features of the unit 06
Performance parameter 09
Outline drawing 11
Piping flow chart 13
Thermal and cold insulation 14
Installation instruction 15

COMPANY PROFILE

The company is owned by Yantai Moon Group who is also the owner of Dunham Bush. Supported by the strong technology research strength of Tsinghua University and the China Academy of Sciences, HYTM developed the modern design Lithium Bromide absorption chiller, including the direct-fired absorption chiller, hot water type absorption chiller, steam type absorption chiller, multi-energy chiller of exhaus t & hot water type, and more than 10 types of Lithium Bromide absorption heat pumps for heating application. The products are widely used in industries like metallurgy, chemical, textile, printing, dyeing, phar maceutical and commercial cooling.

Faced with the new situation, new task, and new goals of energy conservation for low carbon emission, HYTM will more firmly shoulder the corporate emission of “committed to improving the quality of lives” and give full play to its technological advantages and excellent services, create greater energy saving and environmental protection benefits for customers.

PRODUCT APPEARANCE

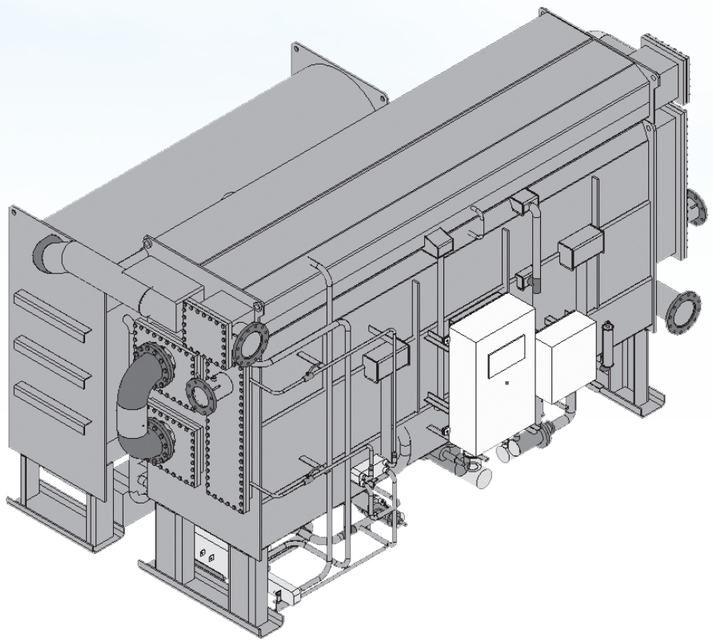

PRODUCT NOMENCLATURE

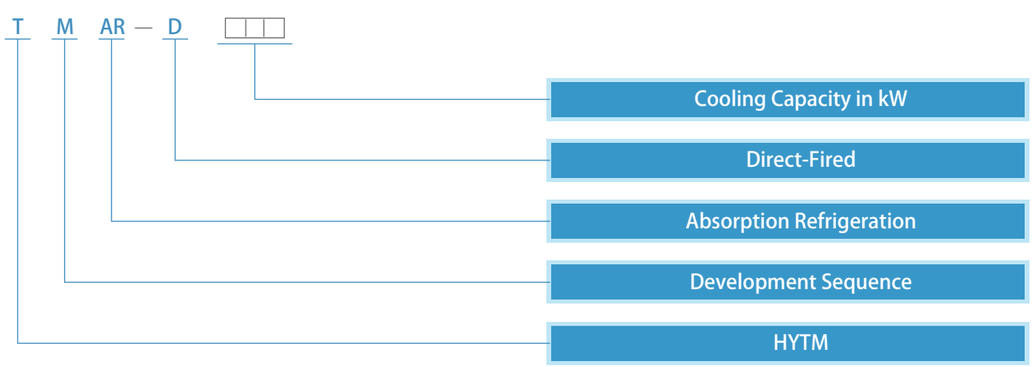

COOLING PRINCIPLE

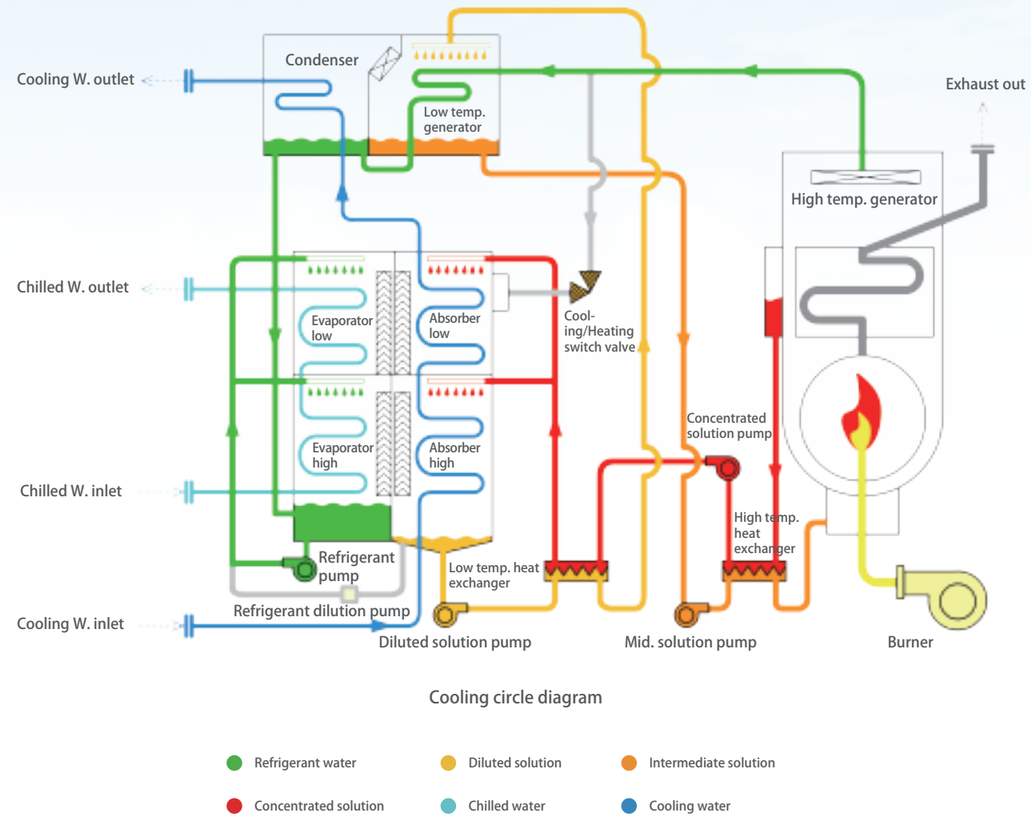

Cooling circle diagram

Refrigerant water absorbs the heat from chilled water, evaporate inside the evaporator and become steam vapor. LiBr strong solution absorber the steam vapor from evaporator and become diluted solution, then flow through low temp. heat exchanger and reach to low temp. generator, become mid. concentration solution after heated by steam generated in high temp. generator, then flow through high temp. exchanger and goes to high temp. generator, after heated by burner combustion heat, the mid. concentration solution become strong solution. The strong solution flow back to absorber through both higher temp. heat exchanger and low temp. heat exchanger, to absorb the steam vapor from evaporator again. The refrigerant vapor generated in low temp. generator is cooled by cooling water and then back to evaporator for a new round of circulation.

HEATING PRINCIPLE

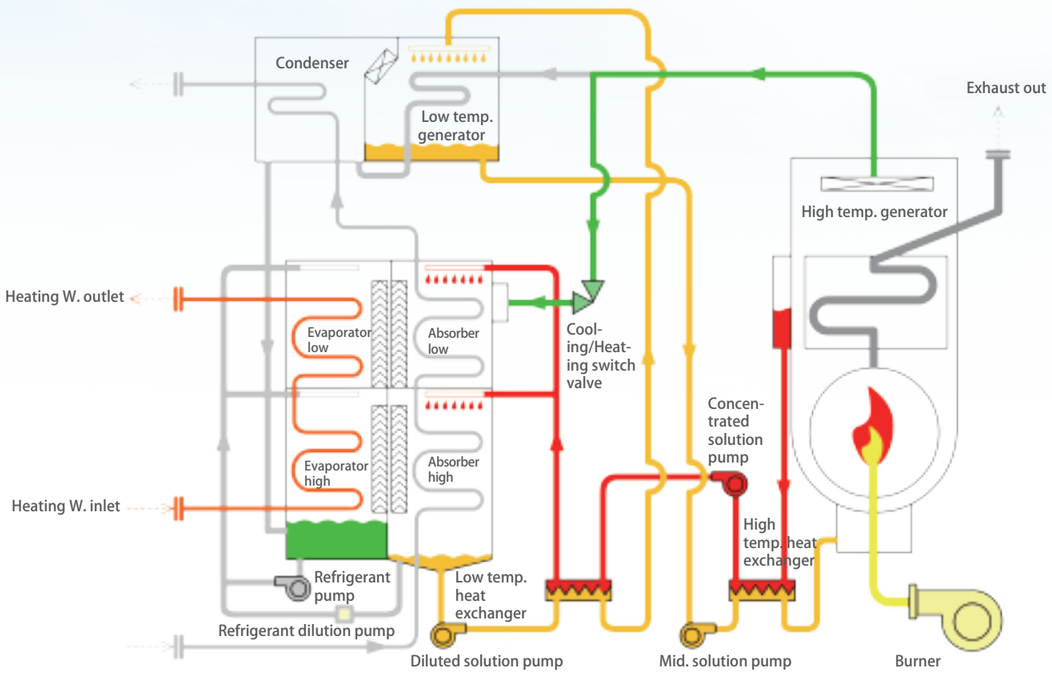

Heating Circle Diagram

Refrigerant water · Diluted solution · Concentrated solution · Warm water

The refrigerant vapor generated by the high temperature generator enters into the evaporator and heats the warm water in the heat transfer tube and condensate itself. The refrigerant condensate water is absorbed by the concentrated LiBr solution in the absorber and then becomes the diluted solution. The diluted solution is sent to the high temperature generator by the solution pump, after heating and concentration, the refrigerant vapor is generated for a new round of circulation.

FEATURES OF THE CHILLER

Energy-efficient evaporation absorption design

a The chiller is designed with double stage evaporation and absorption. Both the evaporator and absorber are consist of two parts, the high pressure part and the low pressure part, the two times evaporation and absorption improve the chiller efficiency dramatically.

b The evaporator tubes is designed with non-equal spacing design and uses copper tubes to improve the efficiency of evaporation.

Advanced gravity dripping technology

a The solution drop and distribution on the tube surface by gravity, no any solution spray pumps are used, and chiller power consumption is also reduced.

b The solution is distributed in 4 stages to make the whole liquid distribution system more scientific and the liquid film on the heat transfer tube more uniform, improving the absorption and evaporation efficiency.

c The liquid distributor is designed with high-quality stainless steel, never blocked during operation and the chiller life span is much extended.

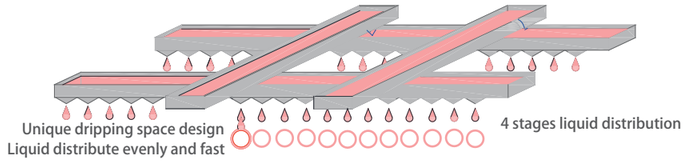

Liquid distribution schematic diagram

FEATURES OF THE UNIT

Full-automatic air purging system

a The chiller is equipped with automatic air purging system, 3-stage protection of the chiller vacuum.

b The auto-purge system can collect the non-condensable gas inside the chiller to the gas tank automatically by the injector, the pressure sensor monitors the pressure inside the gas tank in real time. When the gas pressure reach to set value, the vacuum pump will run automatically to purge the non-condensable gas out of the chiller. No manual operation is required during this whole process.

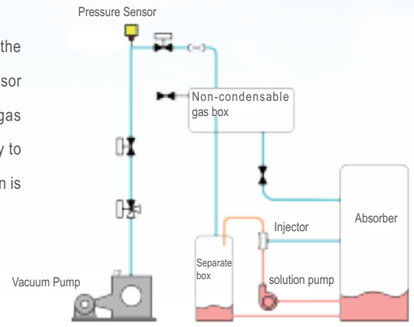

Multilevel anticrystallization system

a The system monitors the crystallization allowance by the concentration of solution and adjusts the cycle in real time to avoid crystallization.

b The unit is equipped with the automatic crystal melting tube to prevent the crystallization of solution and melt the crystal.

c The unit is equipped with the optimal dilution running time control function to calculate the optimal dilution running time based on the concentration at shutdown. Ensure that the unit is safely closed down.

VFD control system

The chiller is designed with VFD control system for the LiBr solution pump to adjust the LiBr solution recycling volume during part load operation, the chiller start up period is shorten and the chiller efficiency in part load is improved.

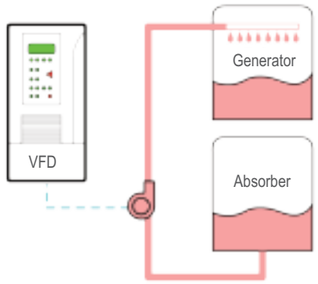

Professional structural intensity design

The shell cylinder and water chamber of the unit are reasonably designed with stress analysis method, meeting the safety use requirements of the customers in various pressure ranges.

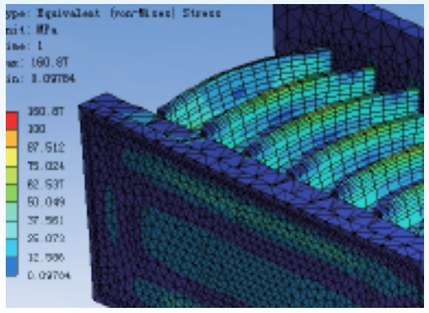

Intelligent Advanced Monitoring System

a This self-developed remote monitoring system can monitor the operation state of the machine comprehensively through computer cloud, mobile phone APP and WeChat, to provide customers with an optimal operation scheme through data and big data analysis of energy consumption.

b The system is able to provide RS485, ethernet and other interfaces and data communication protocols; it allows acquisition, display of the machine parameters and control of the machine through the building centralized control system and industrial DCS centralized control system.

c The advanced remote monitoring system not only can monitor the chiller real operating parameters, but also show the chiller performance curve, pre-alarms and suggestions of how to solve the alarms, the spare part replacement period, the chiller service record, and chiller daily/monthly/yearly fuel consumption cost.

PERFORMANCE PARAMETER

Model	TMAR-D	—	055	065	075	090	100	115	125	140	160	175	205	230	290	350	420	475	530	585	640	705
Cooling capacity		USRt	150	180	210	250	280	320	360	400	450	500	580	660	830	1000	1200	1350	1495	1660	1820	2000
		10^4kcal/h	45.4	54.4	63.5	75.6	84.7	96.8	108.9	121.0	136.1	151.2	175.4	199.6	251.0	302.4	362.9	408.2	452.1	502.0	550.0	605.0
		kW	527.6	633.1	738.6	879.3	984.8	1125.4	1266.1	1406.8	1582.7	1758.5	2039.9	2321.2	2919.1	3517.0	4220.4	4748.0	5257.9	5838.0	6401.0	7034.0
Heating capacity		10^4kcal/h	36.3	43.5	50.8	60.5	67.7	77.4	87.1	96.8	108.9	121.0	147.3	159.7	200.8	241.9	290.3	326.6	361.7	401.6	440.0	484.0
		kW	422.0	506.4	590.9	703.4	787.8	900.4	1012.9	1125.4	1266.1	1406.8	1713.5	1857.0	2335.3	2813.6	3376.3	3798.4	4206.3	4670.4	5120.8	5627.2
Chilled W./Heating W.	Inlet/outlet temp.	°C	12→7																			
	Heating W.Inlet/outlet temp.	°C	55.8→60																			
	Flowrate	m^3/h	90.7	108.9	127	151.2	169.3	193.5	217.7	241.9	272.2	302.4	350.8	399.2	502	604.8	725.8	816.5	904.2	1004.0	1100.7	1209.6
	Pressure drop	mH_2O	5.6	6.1	5.3	5.8	10.2	10.5	10.8	11.2	10.1	10.3	6.7	7.1	8.2	8.8	7.1	7.2	10.7	9.8	9.6	12.2
		kPa	54.9	59.8	52	56.9	100	102.97	105.9	109.8	99	101	65.7	69.6	80.4	86.3	69.4	71.0	104.7	96.6	94.4	119.3
	Pass	—	3	3	3	3	3	3	3	3	3	3	2	2	2	2	2	2	2	2	2	2
	Pipe size	mm	100	100	125	125	150	150	150	150	200	200	200	200	250	250	300	300	300	350	400	400
Cooling water	Inlet/outlet temp.	°C	32→37.5																			
	Flowrate	m^3/h	136.8	164.2	191.6	228.1	255.4	291.9	328.4	364.9	410.5	456.1	529.1	602.0	757.1	912.2	1094.6	1231.5	1363.7	1514.2	1660.2	1824.4
	Pressure drop	mH_2O	8.1	8.7	8.1	8.4	7.2	7.5	7.8	8.1	7.3	7.5	10.2	10.8	10.2	10.1	10.8	10.2	10.1	10.8	12.0	11.4
		kPa	79.4	85.3	79.4	82.4	70.9	73.4	76.2	79.6	71.6	73.8	100	105.9	100	99	105.9	100	99	105.9	118	112
	Pass	—	3+1	3+1	3+1	3+1	2+1	2+1	2+1	2+1	2+1	2+1	2+1	2+1	2+1	2+1	2+1	2+1	2+1	2+1	2+1	2+1
	Pipe size	mm	125	125	150	150	200	200	200	200	250	250	250	250	300	350	350	400	400	450	450	500
Natural gas (8600kcal/Nm^3)	Consumption of cooling	Nm^3/h	38.0	45.0	53.0	63.0	70.0	80.0	90.0	101.0	113.0	126.0	146.0	166.0	208.0	251.0	301.0	339.0	376.0	417.0	457.0	503.0
	Consumption of heating	Nm^3/h	45.4	54.4	63.5	75.6	84.7	96.8	108.9	121	136.1	151.2	184.2	199.6	251.1	302.5	363.0	408.3	452.2	502.1	551	605
Power	Power type	V×Hz×ϕ	380×50×3																			
	Vacuum pump	kW	0.75																			
	Refrigerant pump	kW	0.4	0.4	0.4	0.4	0.4	0.4	0.75	0.75	0.75	0.75	0.75	0.75	1.1	1.1	2.2	2.2	3.7	3.7	3.7	3.7
	Solution pump 1	kW	1.5	1.5	1.5	1.1	1.1	1.5	1.5	1.5	2.2	2.2	3	3.7	3.7	3.7	3.7	3.7	3.7	5.5	5.5	5.5
	Solution pump 2	kW	0.75	0.75	1.1	1.1	1.5	1.5	1.5	1.5	1.5	1.5	2.2	2.2	3	3.7	3.7	3.7	3.7	3.7	3.7	3.7
	Solution spray pump 1	kW	0.75	0.75	0.75	0.4	0.4	0.75	0.75	0.75	0.75	1.1	1.1	1.1	1.5	2.2	1.5	2.2	2.2	2.2	2.2	2.2
	Solution spray pump 2	kW	-	-	-	-	-	-	-	-	-	-	-	-	-	3.7	3.7	3.7	3.7	5.5	5.5	5.5
	Burner fan	kW	1.5	1.5	1.5	2.2	2.2	2.2	2.2	4	4	4	5.5	5.5	7.5	11	15	15	22	22	30	30
	Total power	kW	5.7	5.7	6.0	6.0	6.4	7.1	7.5	9.3	10.0	10.3	13.3	14.0	17.6	26.2	30.6	31.3	39.8	43.4	51.4	51.4
	Total power capacity	kVA	13.1	13.1	13.8	14.6	15.2	16.7	17.5	21.7	22.5	23.1	29.3	30.9	38.3	49.9	66.8	66.8	85.2	87.9	93.2	101.9
Dimension	Length	mm	3750	3750	3750	3750	5000	5000	5000	5000	5000	5000	6500	6500	7500	7500	7500	7500	7500	8250	8650	8850
	Width	mm	2080	2080	2130	2250	2300	2450	2600	2600	2750	2850	2950	3050	3150	3550	4500	4850	5050	5250	5850	5950
	Height	mm	2600	2600	2600	2700	2700	2700	2700	2700	2800	2900	2900	3100	3300	3500	3700	3900	4200	4100	4400	4400
Weight	Max. shipping weight	ton	6.7	7.1	7.7	8.3	9.9	10.6	11.7	12.4	13.5	14.9	17.1	19.4	23.9	27.3	28.9	22.8	26.5	29.4	32.2	35.4
	Total shipping weight	ton	7.9	8.4	9.1	9.9	11.7	12.6	14.0	14.8	16.3	17.9	20.7	23.4	29.0	33.7	46.8	51.5	55.8	61.9	67.3	74.0
	Operation weight	ton	8.5	9.0	9.9	10.8	12.8	13.9	15.4	16.3	18.2	20.3	23.3	26.6	33.3	39.1	53.6	59.6	64.4	71.4	78.3	86.0

Notes:

- The fouling factor of chilled water and cooling water is $0.086m^2k/kw$.
- The max. working pressure at the chilled water and cooling water side is 1.0MPaG, higher working pressure is optional.
- The natural gas consumption is based on low heating value of 8600kcal/Nm^3.
- The chiller dimension can be adjusted according to the client' s requirement.
- The chiller heating capacity can be higher with enlarged chiller generator.
- Chiller cooling capacity adjust range is 20%~100%. Chilled water and cooling water flowrate adjust range is 60%~100%.
- Minimum chilled water outlet temp. is 5°C. Minimum cooling water inlet temp. is 15°C.

Outline drawing

(TMAR-D055~350)

Top view

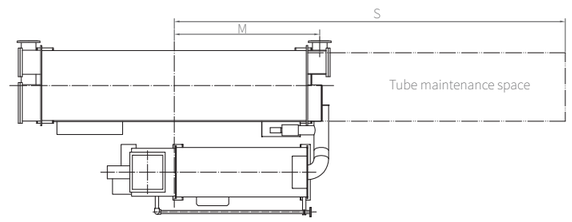

Left view

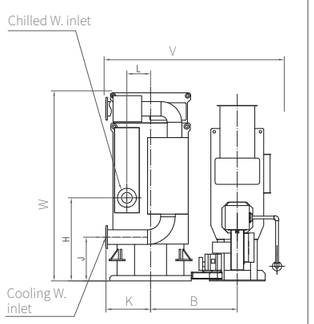

Front view

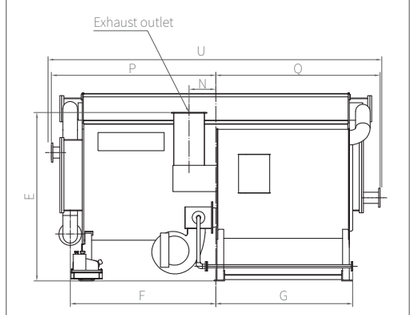

Right view

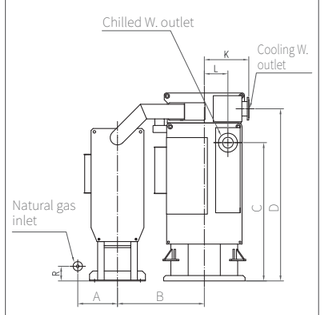

(TMAR-D420~705)

Top view

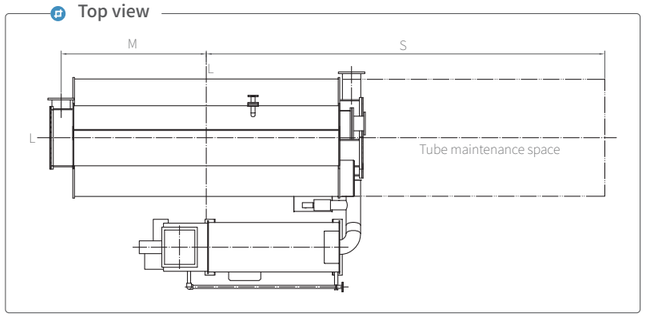

Left view

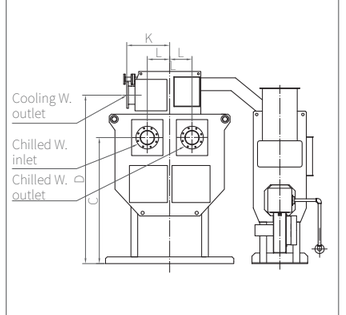

Front view

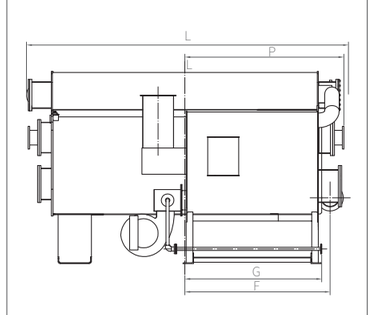

Right view

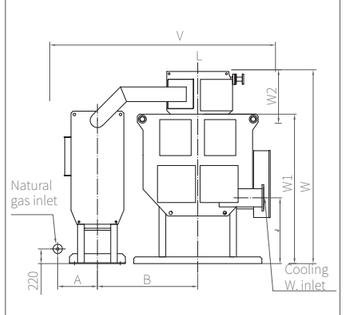

	Chilled W. pipe	Chilled W. pass	Cooling W. pipe	Cooling W. pass	A (Natural gas inlet width)	B (Shell space)	C	D (C outlet height)	E (Exhaust outlet height)	F	G (Natural gas inlet length)	H	J	K	L	M (C outlet length)	N (Exhaust outlet length)	P	Q	R (Natural gas inlet height)	S (Tube maintenance space)	U	V	W
TMAR-D055	DN100	3	DN125	3+1	495	900	1820	2290	2235	1635	1600	1145	765	495	251	1635	596	1850	1850	220	4600	3750	2080	2600
TMAR-D065	DN100	3	DN125	3+1	495	930	1830	2295	2235	1635	1600	1135	775	530	274	1635	683	1850	1850	220	4600	3750	2080	2600
TMAR-D075	DN125	3	DN150	3+1	495	950	1910	2400	2280	1645	1600	1130	740	580	295	1645	683	1850	1850	220	4600	3750	2130	2600
TMAR-D090	DN125	3	DN150	3+1	495	980	1930	2432	2345	1645	1600	1150	740	640	317	1645	824	1850	1850	220	4600	3750	2250	2700
TMAR-D100	DN150	3	DN200	2+1	545	1050	1900	2400	2375	2170	2100	1145	765	615	295	2170	420	2465	2465	220	6100	5000	2300	2700
TMAR-D115	DN150	3	DN200	2+1	545	1165	1915	2415	2380	2170	2100	1160	760	600	317	2170	575	2465	2465	220	6100	5000	2450	2700
TMAR-D125	DN150	3	DN200	2+1	595	1200	1890	2420	2600	2170	2100	1135	760	665	362	2170	616	2465	2465	220	6100	5000	2600	2700
TMAR-D140	DN150	3	DN200	2+1	595	1250	2015	2740	2530	2170	2100	1235	870	700	384	2170	700	2465	2465	220	6100	5000	2600	2700
TMAR-D160	DN200	3	DN250	2+1	645	1300	2100	2630	2700	2195	2100	1250	820	775	395	2195	700	2465	2465	220	6100	5000	2750	2800
TMAR-D175	DN200	3	DN250	2+1	645	1350	2100	2635	2800	2195	2100	1195	705	775	406	2195	921	2465	2465	220	6100	5000	2850	2900
TMAR-D205	DN200	2	DN250	2+1	695	1400	1945	2656	2570	2695	2600	1255	720	775	406	2695	720	3000	3000	220	7600	6000	2950	2900
TMAR-D230	DN200	2	DN250	2+1	745	1450	2160	2800	2700	2695	2600	1360	780	785	427	2695	720	3000	3000	220	7600	6000	3050	3100
TMAR-D290	DN250	2	DN300	2+1	795	1550	2250	2950	3040	3265	3145	1395	735	850	491	3265	875	3545	3545	220	9500	6000	3150	3300
TMAR-D350	DN250	2	DN350	2+1	895	1800	2380	3135	3195	3265	3145	1470	745	900	515	3280	875	3545	3545	220	9500	6000	3550	3500
TMAR-D420	DN300	2	DN350	2+1	895	2300	2500	3350	3450	3265	3145	2500	1130	1400	560	3280	1400	3620	-	300	9500	7500	4500	3700
TMAR-D475	DN300	2	DN400	2+1	895	2450	2540	3420	3550	3265	3145	2540	1140	1450	600	3320	1400	3620	-	300	9500	7500	4850	3900
TMAR-D530	DN300	2	DN400	2+1	895	2550	2620	3510	3800	3265	3145	2620	1200	1500	650	3320	1400	3710	-	300	9500	7500	5050	4200
TMAR-D585	DN350	2	DN450	2+1	950	2650	2620	3510	3850	3265	3145	2620	1200	1500	650	3280	1550	3980	-	350	11300	8250	5250	4200
TMAR-D640	DN400	2	DN450	2+1	950	2850	2660	3590	4150	3265	3145	2660	1240	1550	680	3280	1950	3980	-	350	11300	8650	5850	4400
TMAR-D705	DN400	2	DN500	2+1	950	2850	2660	3590	4150	3265	3145	2660	1240	1550	680	3360	1950	4210	-	350	11500	8850	5950	4400

PIPING FLOW

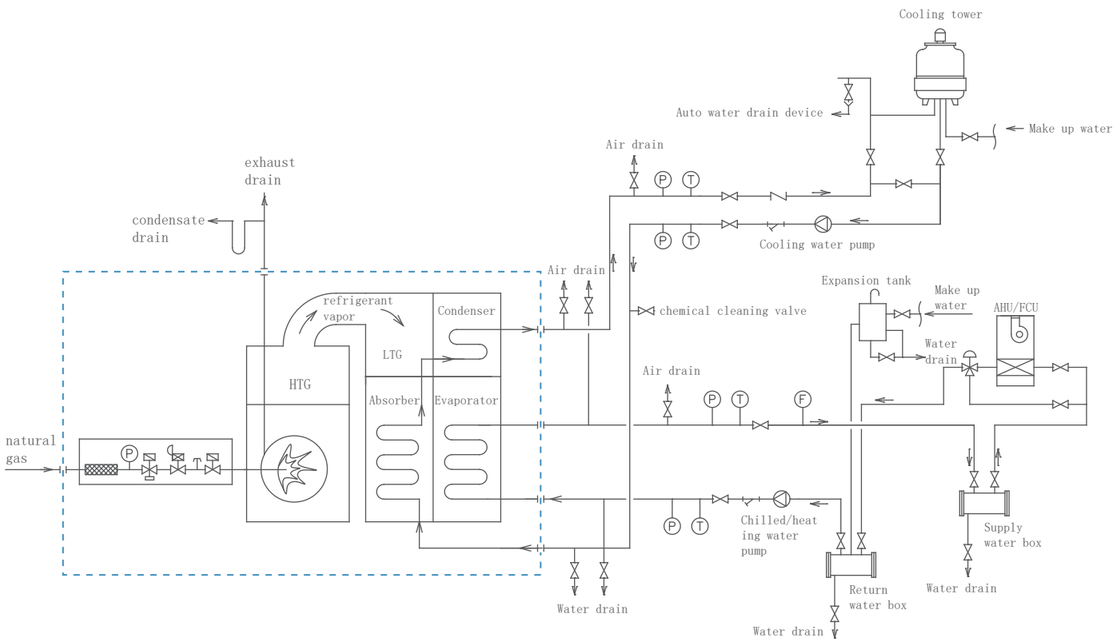

Sample: Ⓟ Pressure meter Ⓣ Thermometer Ⓕ Flow meter Filter Check valve Shut off valve

Note:

① the standard supply scope is within the range of

② the piping flow is just for reference.

THERMAL AND COLD INSULATION

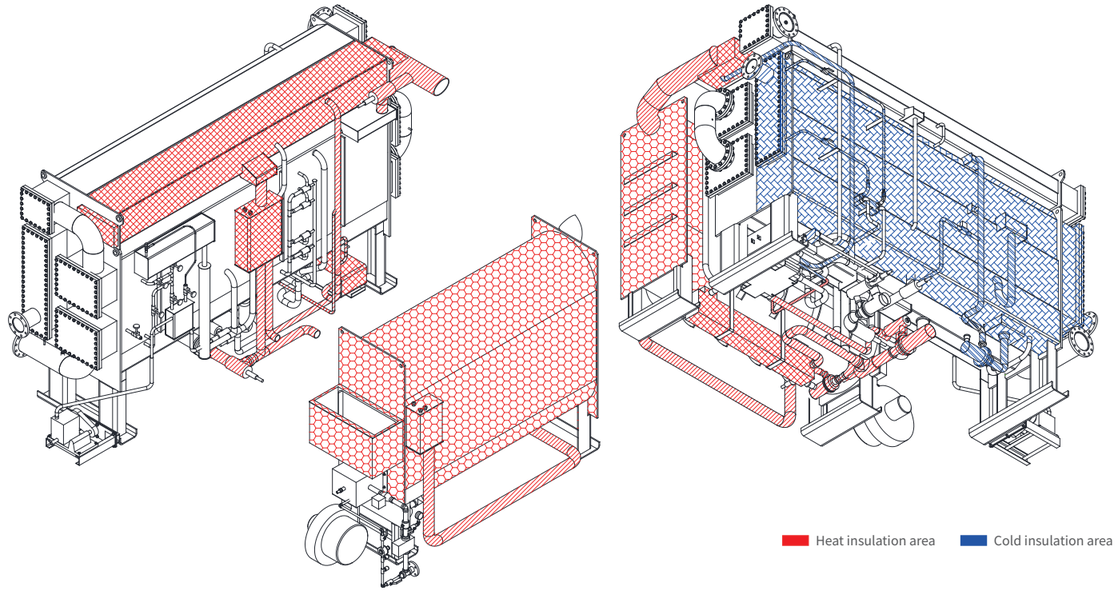

- The chiller thermal and cold insulation should be done after the chiller installation, piping and completion of vacuum test at jobsite.
- The chiller thermal and cold insulation should be done according to the HYTM " insulation indication drawing", which is shipped together with the chiller.
- The outer package, cover and flange shall be all made into the construction for easy loading and unloading.
- Do not hide various meters, instruments, wire harnesses in the thermal and cold insulation materials, in order for the easy determination of actions and adjustment.In addition, please take care not to break or damage wire harnesses and fine ducts.
- The thermal and cold insulation materials shall be non-combustible.
- When the thermal and cold insulation materials are fixed by supporting pedestal, please make sure to use the binder, and absolutely avoid the welding process (it may cause damage to the vacuum of unit and components in the flange).

INSTALLATION GUILDANCE

01 Precautions

- Please arrange professionals to conduct operations of machine lifting, handling, installation, etc. Improper operations are likely to cause the machine upside down and falling, as well as major accidents such as serious injuries, deaths, etc. Be sure to observe the rules.

02 Installation position

- The absorption chiller is featured with low noise and slight vibration, so it can be installed in the basement or on the roof with metal enclosure. It's necessary to consider the actual on-site situation of the customer, simple and convenient maintenance with respect to the final installation position. The chiller dimension can be adjusted to fit the client's installation space limitation.

03 Handling instructions

- Choose to use the lifting capacity of lifting machinery for handling according to the handling weight as recorded in the outline drawing.
- Since there are special lifting holes on the unit, the unit may be damaged with great loss if it is lifted from other position.
- Distribute the unit weight evenly among all lifting points during handling, and please maintain a horizontal lifting and landing..
- Be careful not to damage the components or pipelines beside the lifting rope during installation and pulling of the lifting rope. Make reference to Lifting Drawing for the weight and diameter of lifting hole.
- Please absolutely avoid the contact or collision with surrounding objects.
- Especially with the front of the machine, which is surrounded and attached by a number of small matching pipes and instruments. Please take care to prevent collision and damage.
- When handling in split type, please first handle the part fitted inside and far away from the inlet.

04 Machine room settings

- The machine shall be arranged at the place with favorable ventilation, and the ventilation equipment shall be installed in the machine room.
- Avoid damp and dusty places which are likely to cause electrical failure.
- Control the ambient temperature of machine room at 0℃ to 40℃. The frost crack shall be caused during power-off in case it is too cold, and damage to electrical elements of the unit shall be caused in case it is too hot. Control the ambient humidity below 85%, which will affect the electrical insulation if too high.
- Daylighting shall be taken into consideration in the machine room, to facilitate the daily monitoring and inspection and maintenance.
- Install the machine in the position of easy drainage.
- Please control the levelness of water chiller-heater, as well as the length and width of cylinder below 1/1000.
- Determine the horizontal perpendicularity by means of the mounting adjustment sizing block during installation.
- Since the maintenance and repair of the machine need to be considered around the unit arrangement, at least 1m of operating space shall be left around the unit, and the space for tube drawing shall be left on any side of both ends of the unit (refer to outline drawing); 1.5m of space is recommended to be left on the side of control cabinet; it is suggested that the distance between the top of unit and the ceiling shall be no less than 0.5m. Please refer to the outline drawing of the unit for details.
- Relevant laws and regulations shall be observed to ensure a safe distance from the combustible parts of the building and combustible materials.

INSTALLATION GUILDANCE

05 Foundation ground

- It is necessary to carry out the waterproof construction for the foundation ground, with the drainage ditch arranged. It is suggested that the foundation load shall be 1.5 times the operating weight. Place the unit on the foundation directly without fixing by bolts when the unit is in position. If there is a need to use anchor bolt for fixing in case of strong vibration source surrounded by the unit or demand of shock resistance by the user, please illustrate the situation when ordering.

06 Water Piping

- The user shall prepare the external pipes connected from the unit.
- Please mount the chilled water pump, cooling water pump and expansion tank in the right position, so that the pressure applied to the body will not exceed the specified value.
- Each chiller shall be fitted with dedicated chilled water pump, warm water pump and cooling water pump as far as possible, and the water pump flow rate shall meet the requirements.
- Mount the filter on the inlet side of the unit (10 mesh).
- The treatment of water quality (when the water quality is poor) is necessary to prevent the scale depositing and corrosion of heat transfer tube.
- Carry out the cleaning and rust removal through bypass pipeline after pipe laying, and then connect pipes with the unit. The washing water shall not be allowed to pass through the unit.
- In order for the management of cooling water quality, please install the regulating valve on the water supply pipe and sewage pipe of the cooling tower.
- Install the thermometer and pressure gauge near the inlet and outlet of cooling and warm water as well as cooling water, and install the vent valve and drain valve in the right position.
- A 40A connecting pipe shall be installed between the machine and each inlet and outlet, in order to clean the whole circulation system with cleaning fluid.

07 Gas, smoke exhaust and flue

- The customer shall specify the gas type, calorific value and pressure during ordering, so that our company can select the burner exactly, and give feedback on the diameter of gas pipe to the customer, then the customer shall set the filter, flow meter, ball valve, bleeder, pressure gauge in line with this specification.
- It is necessary to mount a gas leakage detection and alarm device in the machine room.
- The preparation of flanges for connecting flues shall be undertaken by the client (please refer to the outline drawing for dimensions). The fixed bolt shall be of full thread.
- The flue pipe size should be larger than the chiller exhaust drain connection pipe section, so as to avoid the acute angle bending of flue pipe and the sharp change of passage area, and reduce the eddy current and back pressure.
- The flue shall be designed as a lateral flue as far as possible, with bending parts reduced. When the ventilation force at the smoke exhaust outlet of water chiller-heater varies greatly, set up a ventilation regulator, and pay attention to the difference of ventilation in summer and winter in particular.
- Set an 1/18 ascending slope for the lateral flue, and adopt the smooth and rounding transition in bending parts of the flue.
- The flue and chimney shall be dedicated for the water chiller-heater (sharing flue and chimney with other equipment will lead to smoke exhaust problems).
- The flue and chimney shall be made of stainless steel plate , and the galvanized iron sheet or ordinary construction shall be made of hot-rolled steel, with a thickness of more than 4mm. The lack of rigidity of the flue may lead to the vibration and noise at times.

INSTALLATION GUILDANCE

07

- Make sure to set the drain hole of condensation water at the bottom of chimney or exhaust cylinder and on the flue. In addition, please use the cleaning hole structure with a cover for easy cleaning inside the chimney.
- The drain connector holder is fitted on the bottom of flue chamber in front of the water chiller-heater (Rc 3/4 internal thread).
- The flue and chimney which pass through parts of building such as walls, ceilings, etc. need to be made into the heat-resistant and fire-resistant structure.
- Carry out the construction of thermal insulation for flue and chimney. The thermal insulation material shall be non-combustible, with the heat-resistant temperature up to 350℃.
- The opening of the chimney shall be more than 1m away from the house, or more than 3m away from the opening (windows, doors, vents, etc.).
- The top of the chimney shall be 0.6m higher than eaves where there are houses within 1m of horizon range from the top of chimney.
- Spare enough distance from the cooling tower and air inlet for air conditioning with respect to the position of the chimney opening or the exhaust cylinder outlet.
- Protect the opening of the chimney from rainwater intrusion, and ensure that the ventilation will not be affected by the natural wind.The chimney shall be fitted with the lightning rod or connected to the ground wire.
- Please install the silencer in case that the chimney outlet near residential houses with problems of smoke exhaust and noise caused.
- The design and construction for chimney or exhaust cylinder are in line with relevant laws and regulations.

ELECTRICAL INTERFACE

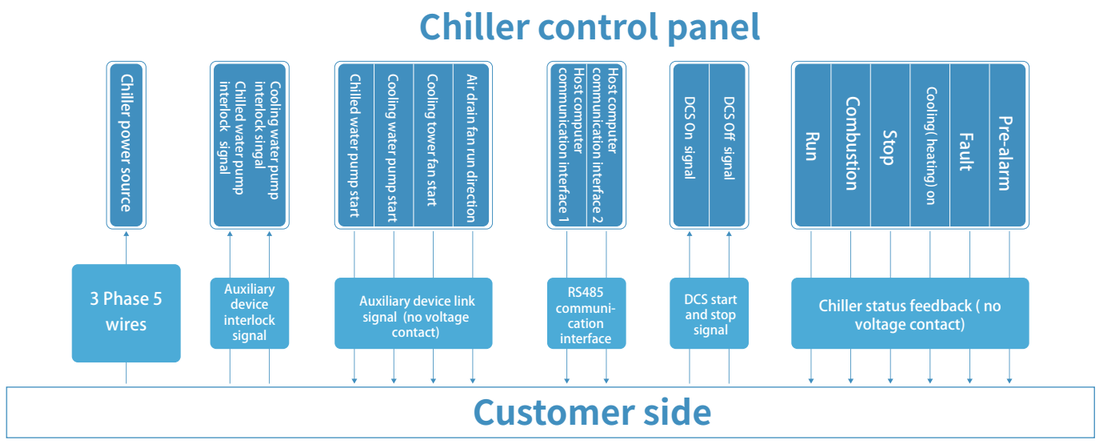

MOON ENVIRONMENT TECHNOLOGY CO.,LTD.

Add: No.1 Binglun Road,Yantai,P.R.China
Service Hotline: +86-535-6697172
Email: info@moon-tech.com
Website: www.moonoverseas.com

WhatsApp